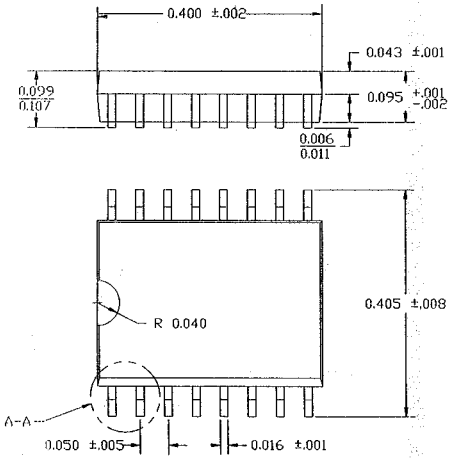

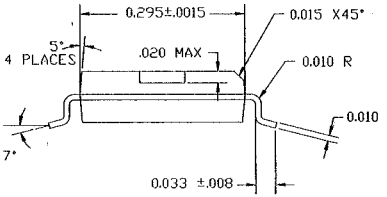

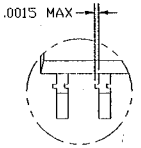

SECTION A-A

NOTES:
1. Leads must be co-planar within .004"
2. Package mismatch (Top' to Bottom) = .0015"
3. Trim Lead Mismatch - see section A-A

NORSK ENGINEERING, INC.

X.± 0.10 (2.54)	X.°± 1°	FINAL ASSY DESCRIPTION	NORSK ENGINEERING, INC.
.X± 0.050 (1.27)	.X°±	FINAL ASSY P/N:	TITLE: 16 LEAD SOIC Wide Body
.XX± .010 (.25)	.XX°±	APPD:	DWG. NO: 16SOICR3
.XXX± .005 (.13)	.XXX°±	CHKD:	MATERIAL:
UNLESS OTHERWISE NOTED DIMENSIONS ARE IN INCHES (MM)		DWN: DANIEL HILTGEN	SCALE / SHEET / REV. 3
		DATE: 11/15/93	