REVISIONS				
ZONE	LTR	DESCRIPTION	DATE	APPROVED
	REV	ECN_NO.	DATE	

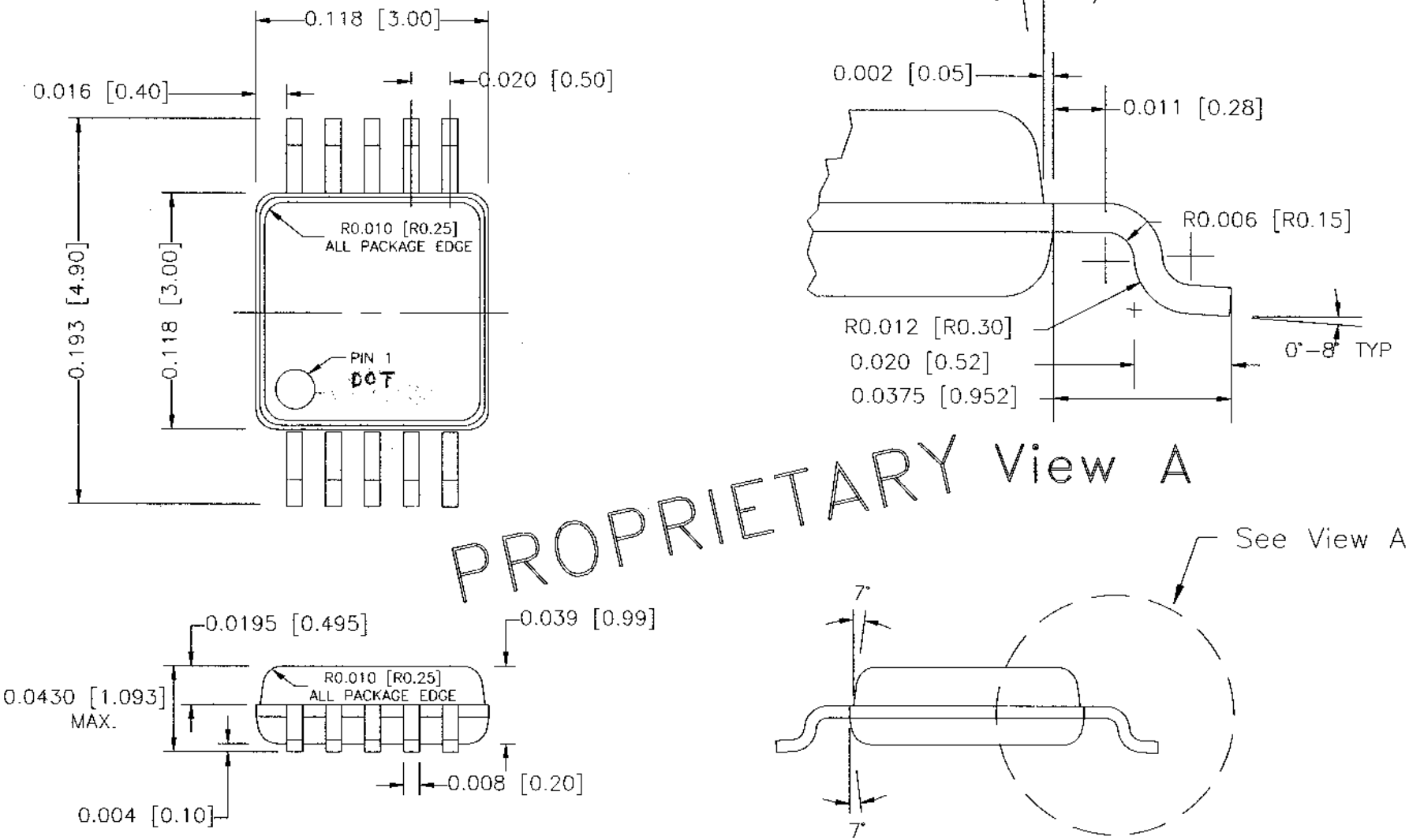

ALL INFORMATION CONTAINED HEREON IS THE PROPERTY OF PROMEX, INC. AND IS CONSIDERED PROPRIETARY AND SUBJECT TO RETURN UPON DEMAND. ACCEPTANCE AND RETENTION HEREOF SIGNIFIES AGREEMENT BY THE RECIPIENT THAT THE INFORMATION WILL NOT BE DISCLOSED TO OTHERS NOR USED CONTRAY TO THE INTEREST OF PROMEX, INC. WITHOUT PRIOR WRITTEN PERMISSION.

MATERIAL: 0.006" (15um) Half hard Copper

FINISH:

UNSPECIFIED TOLERANCE:
DO NOT SCALE DRAWING
DIMENSIONS APPLY AFTER PLATING
ALL DIMENSIONS ARE IN INCHES

DEC.	± 0.03	± 0.08	± 0.012	MM
	± 0.01	± 0.003	± 0.0005	INCH
ANGLES	± .5°			

USED ON	NEXT ASSEMBLY	QTY

CONTRACT NO.

DRAWN	DATE
Wayne Louie	4/9/01
CHECK	
DESIGN	
DESIGN ACTIVITY	
CUSTOMER	

PROMEX 3075 Oakmead Village Drive Santa Clara, CA 95051

TITLE
MSOP 10ld
PACKAGE OUTLINE
JEDEC STANDARD MO-187

SIZE A | DWG NO. | REV

SCALE | FILE NAME | SHEET OF